Cook, Harry L.

gl cont # 209

PROPERTY OF
Bureau Commercial Fisheries
Biological Laboratory Library
GALVESTON TEXAS

REARING PENAEID SHRIMP FROM EGGS TO POSTLARVAE[1]

HARRY L. COOK AND M. ALICE MURPHY
Bureau of Commercial Fisheries Biological Laboratory
Galveston, Texas

ABSTRACT

A description is given of the physical facilities in which mass cultures of penaeids have been reared from eggs to postlarvae. The metal chelator EDTA was added to the water in which the shrimp were grown. Larvae of *Penaeus aztecus* developed more rapidly at 30° C than at lower temperatures. Salinity varied from 20.5% to 36.0% during rearing trials in which *P. aztecus* larvae were reared to postlarvae. Addition of mixed algal cultures as food gave better survival than additions of their individual components. EDTA was used as an additive to filtered sea water to grow a diatom, *Skeletonema* sp., in mass culture, as food for larval shrimp.

INTRODUCTION

The shrimp fishery, the most valuable fishery in the United States, has been characterized by wide annual fluctuations in the commercial catch. Biologists at the Bureau of Commercial Fisheries Biological Laboratory at Galveston, Texas, are studying the life histories of the commercially important shrimps in an attempt to discover the causes of the fluctuations. These shrimp spend their adult life in offshore waters, where they reach sexual maturity and spawn. After a short planktonic existence, during which the eggs hatch and the larval stages are completed, the shrimp enter the estuaries as small postlarvae. After several months of rapid growth in the estuaries, the young shrimp migrate back to the offshore waters.

Investigations during the past five years indicate that the numbers of postlarval brown shrimp, *Penaeus aztecus*, entering Galveston Bay nurseries can be closely correlated with the annual commercial catch (Baxter, 1962 and Baxter et al., 1965). Apparently mortalities in this estuary are not of sufficient magnitude to account for the yearly fluctuations. The fluctuations also do not seem to be caused by a lack of spawning shrimp. It would appear then, that the most critical factors are those affecting survival of the larvae or early postlarvae while they are still offshore.

One of the prerequisites in attempts to delineate these factors is precise identification of larvae taken in plankton samples. The most reliable method of obtaining accurate identifications of larvae is to rear them under controlled conditions from eggs of known parentage. Sufficient criteria have been established so that the three species of commercially important shrimp of the genus *Penaeus* can be separated from other species in the samples. They cannot, however, be distinguished from each other. Both pink shrimp (*P. duorarum*) and brown shrimp have been reared in the laboratory and complete larval series have been obtained with which detailed taxonomic studies are being conducted. Larvae of white shrimp (*P. setiferus*) of known parentage are not yet available.

We have experienced some success in rearing shrimp but are still trying to modify procedures so that sufficient numbers of larvae can be grown in mass culture to supply material for detailed physiological studies. If physiological requirements of larvae can be determined in the laboratory, personnel engaged in field studies will have a better idea of which environmental factors to measure.

The Japanese have cultured penaeid larvae for years (Hudinaga, 1942), but, with a few exceptions, attempts in this country and elsewhere have been unsuccessful. Heldt (1938) and Ewald (1965) succeeded in rearing small numbers of larvae to postlarvae. Johnson

[1] Contribution No. 209, Bureau of Commercial Fisheries Biological Laboratory, Galveston, Texas.

c. 2

Proceedings 19th Annual Conference Southeastern Association of Game and Fish Commissioners, 1966
pp. 283-288

and Fielding (1956) reared large numbers in ponds, but unfortunately their work has not been duplicated.

We have successfully reared four species (brown; pink; seabob, *Xiphopeneus krøyeri*; and *Trachypeneus similis*) in small mass cultures. During our studies, we have developed rearing techniques and made observations on larval growth and behavior that are presented here.

CULTURE METHODS

Ripe female shrimp are caught in commercial, 45-foot, otter trawls. It is generally not necessary to take males because females are implanted with a spermatophore at sea, and the eggs are fertilized as they are spawned. In most species of penaeid shrimp, the spermatophore is placed internally and is lost only when the exoskeleton is shed, but in some species, including the white shrimp, it is placed externally and is usually dislodged and lost during capture. It will probably be necessary either to take both sexes of these species and fertilize the eggs artificially, or to hold males and females in artificial impoundments where natural impregnation can occur.

On the vessel, the shrimp are held in a tank through which water is circulated continuously. For the short trip from the dock to the laboratory, they are kept in 20-gallon plastic barrels. At the laboratory, the shrimp are usually placed singly in 100-liter, fiberglass tanks containing well-aerated water that has been passed through a 5μ cellulose filter.

During spawning, the shrimp releases many metabolites as by-products which soon pollute the sea water, killing both eggs and larvae. Initially, antibiotics were used to attempt to control this contamination. The addition of sodium penicillin G and dihydrostreptomycin sulfate in concentrations of 50 iu and $50\mu g$, respectively, per ml of sea water prior to spawning, controlled contamination for 24 to 48 hours. During this time the eggs hatched, and larvae could be isolated.

We have now, however, developed a method of filtration which has made the use of antibiotics unnecessary (Fig. 1). One end of each 100-liter fiberglass tank, in which the ripe shrimp are placed, is fitted with a fine-mesh (0.12-mm opening) nylon screen. Water is drawn by pump from behind the screen and recirculated through a crushed-oyster-shell filter without loss of or damage to the eggs or larvae. The area of the screen must be large enough that the flow of water through it is almost imperceptible. If the screen is too small, larvae are drawn against it and trapped by the water flow. We have found it best to set up the apparatus and recirculate the water, to condition the filter, for several days before actual use.

Once the eggs have been spawned, the adult is removed from the tank to keep her from eating the eggs.

Shrimp larvae are rather hardy and are not injured by gentle handling. After hatching, the nauplii can be siphoned out of the large tank and caught on a stainless steel screen. Although the larvae suffer no perceptible damage in the process, care must be taken to keep the screen immersed at all times. The larvae can then be easily dispensed, for experimental studies, into any suitable container. We usually use 250-ml beakers containing about 100 ml of medium, which is changed daily.

Water in the large tanks is recirculated continuously until the first protozoeal stage is reached and feeding starts. Thereafter, the water, although aerated vigorously, is recirculated only intermittently, to minimize loss of food but still maintain cleanliness.

Shrimp larvae are positively phototropic. If reared under an overhead light source, they swim to the surface, become trapped by the surface tension, and die because they are too weak to break loose. Conversely, a light placed beneath the semitransparent fiberglass tanks causes larvae to congregate on the bottom. If the water above the light is aerated vigorously, the larvae are dispersed throughout the tank. The larvae can also be reared in the dark; light is not essential to their development.

MEDIA

The choice of a suitable medium in which to rear the larvae has been difficult because results have varied with the same type of medium in different rearing experiments. Even though spawning and hatching have been accomplished in water obtained both from the bay and from offshore, we have been unable until recently to rear larvae in unenriched sea water. Larvae were reared to postlarvae by using "B_5" medium (Wilson and Collier, 1955) and "Miquel's" medium (Lutz et al., 1937) with soil extract, but results were inconsistent. In the past several months, however, we have successfully reared larvae by adding only the sodium salt of the metal chelator EDTA to filtered sea water. With EDTA as an additive in a concentration of 1 gram per 100 liters of sea water, small mass cultures were reared successfully for the first time.

Ewald (1965) reported differences between the survival of pink shrimp larvae cultured in bay and oceanic waters. The survival of the later larval stages was considerably greater in the oceanic water. Our comparable experiments have produced inconclusive results. In one experiment, beakers holding larvae were divided into four equal lots, each containing different media: untreated offshore water, offshore water with EDTA, untreated bay water, and bay water plus EDTA. Postlarvae were subsequently obtained in the beakers containing offshore water plus EDTA, but all larvae in the other media died. The larvae used in the experiment were taken from a large tank containing bay water with EDTA. Even though larvae in the beakers containing the same medium died, those in the large tank developed to postlarvae.

The results of an early experiment designed to test the influence of sterilization of media and the addition of antibiotics on survival of larvae in both bay water and offshore water are shown in Table 1. Although all larvae died, a clear-cut difference was evident between both the two types of water and the treated and untreated water. Offshore water appeared to be a better medium than bay water, and autoclaved water and autoclaved water plus antibiotics were better than either offshore or bay water.

TEMPERATURE

Temperature greatly affects the rate of larval development. The results of an experiment to determine the effects of temperature on the development of brown shrimp are shown in Figure 2. Salinity during the experiment was 30o/oo. No larvae have undergone complete development below 24° C. Those reared at 18° C and 21° C were active during the nauplial substages but did not survive the molt to protozoea I. Those held at 24° C took considerably longer to develop than those held at either 27° C or 30° C. The first postlarva was obtained after 11 days at 30° C, 12 days at 27° C, and 15 days at 24° C. Temperatures above 30° C were not tried.

SALINITY

Two experiments were conducted to determine the effects of salinity on the development of brown shrimp larvae, but the larvae died during the first protozoeal substage. Brown shrimp larvae have been reared to postlarvae four times, however, and the salinity variation between experiments was fairly large. Larvae were grown in a mass culture with an initial salinity of 24.1o/oo that, with daily water changes, decreased to 20.5o/oo before the first postlarval stage was reached. The highest salinity at which they have been reared was 36.0o/oo. Thus, it would seem that even though brown shrimp larvae normally live in the more saline offshore water, high salinities may not be essential.

FOOD

Particulate food is not required during the nauplial stage. A diatom, *Skeletonema* sp., is used as food for the protozoeal substages and brine shrimp, *Artemia* sp., for the later stages. Larval mortality has been greatest at the molt to, and during, the first protozoeal substage. For

example, brown shrimp on a diet of *Skeletonema* suffered about 25% daily mortality during the first protozoeal substage (Fig. 3). After the second protozoeal substage was attained, brine shrimp were added to the diet and mortality was greatly reduced. We think the heavy mortality during the first protozoeal stage is caused by a food deficiency and could probably be reduced greatly if the shrimp were fed a more nutritious food than *Skeletonema*.

Four other organisms tested as foods have given larval survival as good as or better than those obtained with *Skeletonema*. They were a diatom, *Thalassiosira* sp.; a monad, *Dunaliella* sp.; and two dinoflagellates, *Gymnodinium splendens* and *Exuviella* sp. Also, mixtures of food organisms gave better results than their individual components. In one experiment, all first protozoeae which were fed an unidentified diatom died after one day, but when this diatom was combined with *Exuviella* and *Thalassiosira*, survival of larvae was greater than that obtained with a mixture of only *Exuviella* and *Thalassiosira*.

Mass cultures of *Skeletonema* have been maintained as long as seven days by using the metal chelator EDTA as an additive in a concentration of one gram per 100 liters of sea water as recommended by Johnston (1964). Because the culture tanks are uncovered, they usually become contaminated after seven or eight days, even though the water is filtered through a Gelman metrical filter (0.80μ pore size) and a type E glass-fiber prefilter before it is used. To assure a constant supply of diatoms for feeding, two 40-liter cultures are alternated; the second is started after the first is about four days old. Inoculated with one liter of diatom culture, the mass cultures usually reach a cell density of 92,000 per ml in about two days. This cell density is maintained by replenishing one-half the culture volume daily. Constant illumination of 1,000 foot-candles is supplied with fluorescent lights.

LITERATURE CITED

Baxter, K. N. 1962. Abundance of postlarval shrimp — one index of future shrimping success. Proc. Gulf Caribb. Fish. Inst., 15th Ann. Sess.:79-87.

Baxter, K. N., C. E. Knight, and C. H. Furr. 1965. Abundance of postlarval and juvenile shrimp. U. S. Fish Wildl. Serv., Circ. 230:34-35.

Ewald, J. J. 1965. The laboratory rearing of pink shrimp, *Penaeus duorarum* Burkenroad. Bull. Mar. Sci., 15(2):436-449.

Heldt, J. H. 1938. La reproduction chez les crustacés decapodes de la famille des pénéides. Ann. Inst. Océanogr. Monaco, 18(2):31-206.

Hudinaga, M. 1942. Reproduction, development, and rearing of *Penaeus japonicus* Bate. Japanese J. Zool., 10(2):305-393.

Johnson, M. C., and J. R. Fielding. 1956. Propagation of the white shrimp, *Penaeus setiferus* (Linn.), in captivity. Tulane Stud. Zool., 4(6):175-190.

Johnston, R. 1964. Sea water, the natural medium of phytoplankton. II. Trace metals and chelation, and general discussion. J. Mar. Biol. Assoc. U. K., 44(1):87-109.

Lutz, Frank E., Paul L. Welch, Paul S. Galtsoff, and James G. Needham. 1937. Culture methods for invertebrate animals. Dover Publications, Inc., New York. 590 p.

Wilson, W. B., and Albert Collier. 1955. Preliminary notes on the culturing of *Gymnodinium brevis* Davis. Science, 121:394-395.

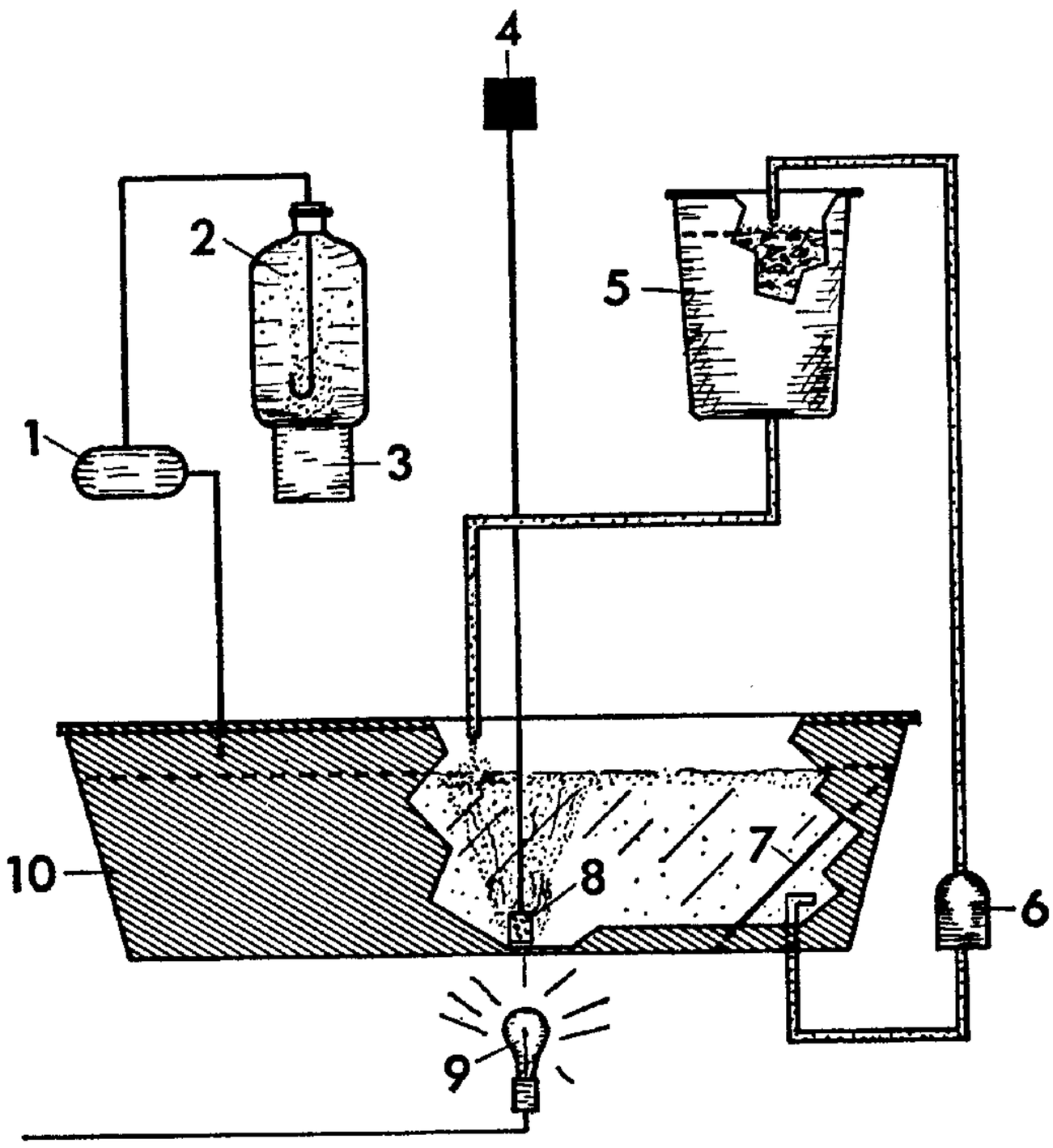

1 METERING PUMP
2 DIATOM CULTURE
3 MAGNETIC STIRRER
4 AIR PUMP
5 CRUSHED OYSTER SHELL FILTER
6 PUMP
7 PLANKTON SCREEN
8 AIR STONE
9 LIGHT
10 100 LITER FIBERGLASS AQUARIUM

Figure 1. Apparatus used to rear larval shrimp.

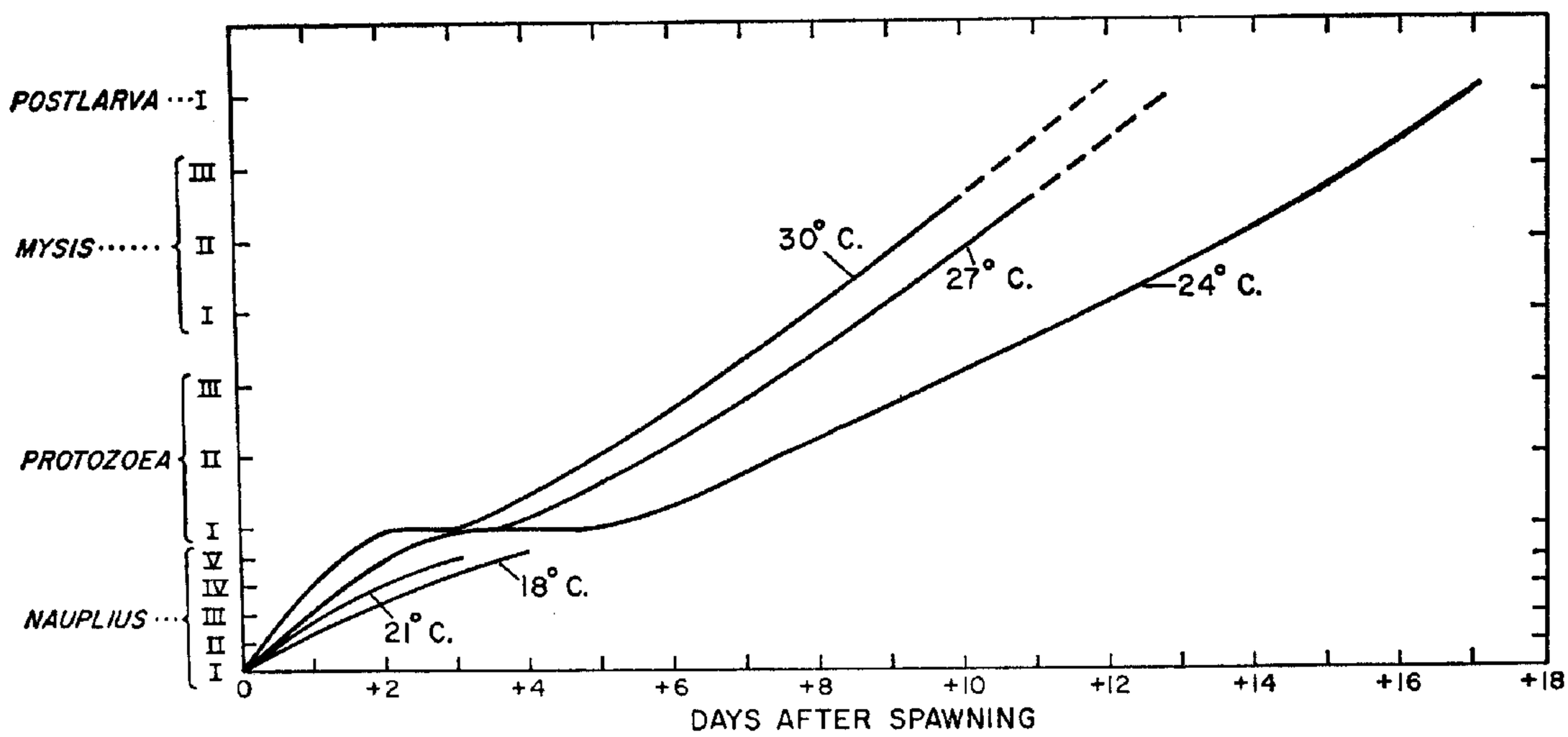

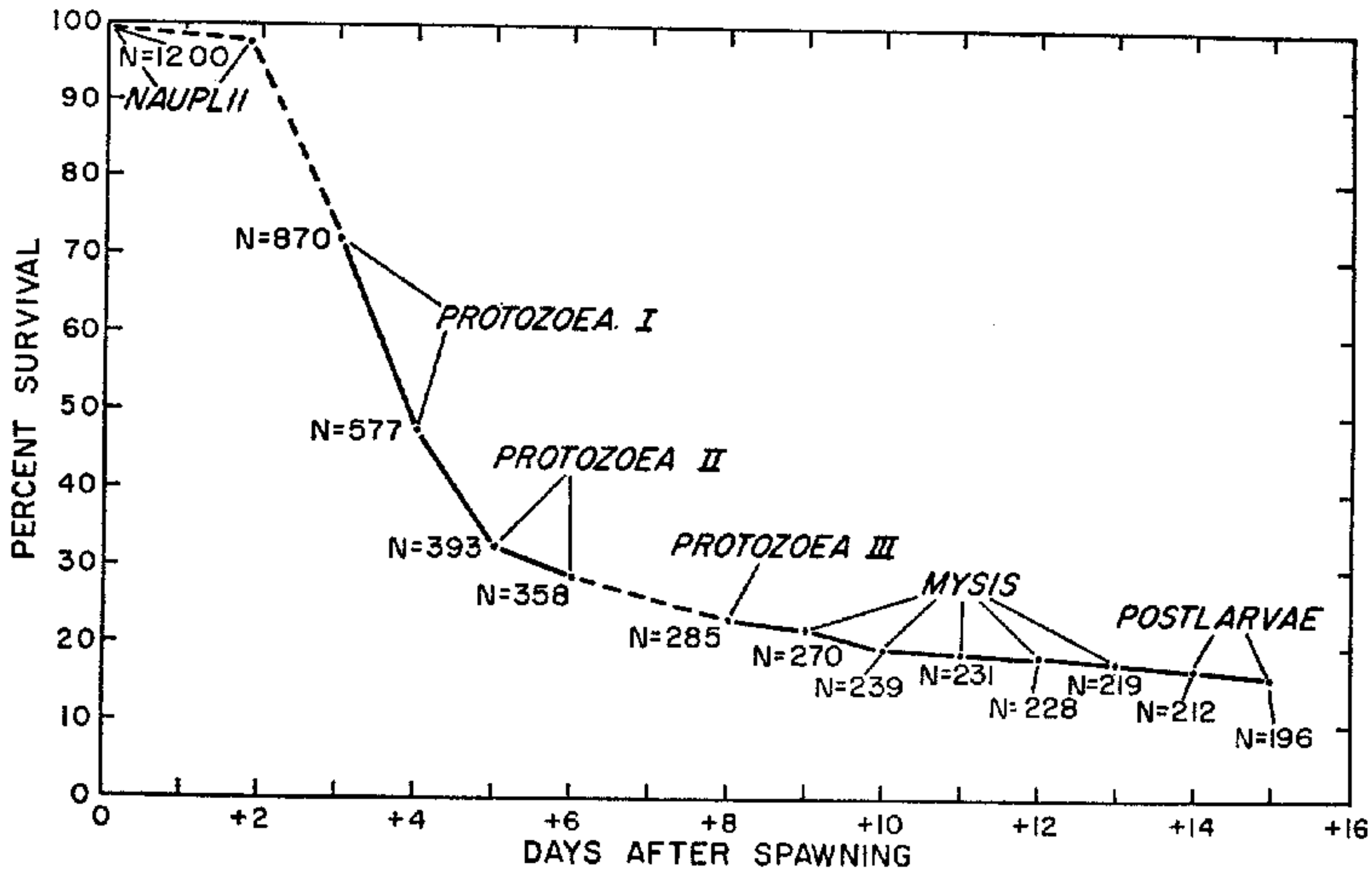

Figure 3. Survival of brown shrimp larvae, N = number of larvae.

Table 1. Number and stage of development of larval brown shrimp surviving after culture in different media (N = nauplii, P = protozoeae).

Type of water and treatment	Days after hatching					
	0	1	2	3	4	5
Untreated bay	25N	22N	0	0	0	0
Bay + antibiotics	25N	24N	7N	0	0	0
Autoclaved bay	25N	23N	19N	0	0	0
Autoclaved bay + antibiotics	25N	24N	23N	13N 10P	0	0
Untreated offshore	25N	22N	22N	9N 9P	0	0
Offshore + antibiotics	25N	24N	24N	8N 16P	0	0
Autoclaved offshore	25N	24N	24N	23P	20P	0
Autoclaved offshore + antibiotics	25N	25N	25N	25P	13P	0

RECEIVED
MAR 14 1967
BUR. COMM. FISH. LAB.
GALVESTON, TEX.